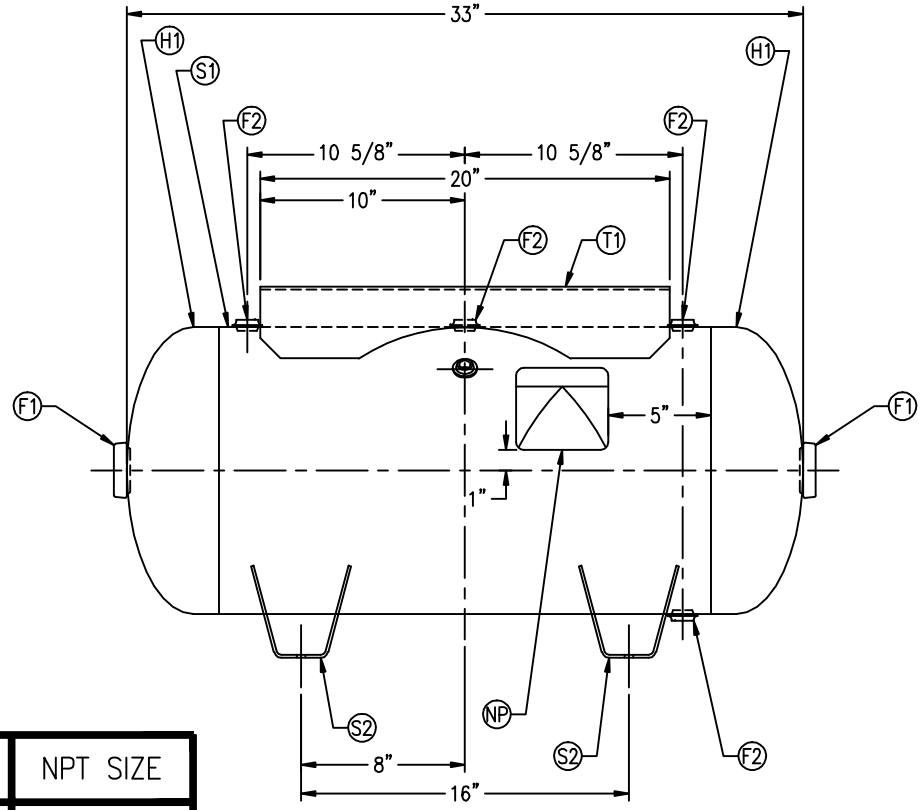

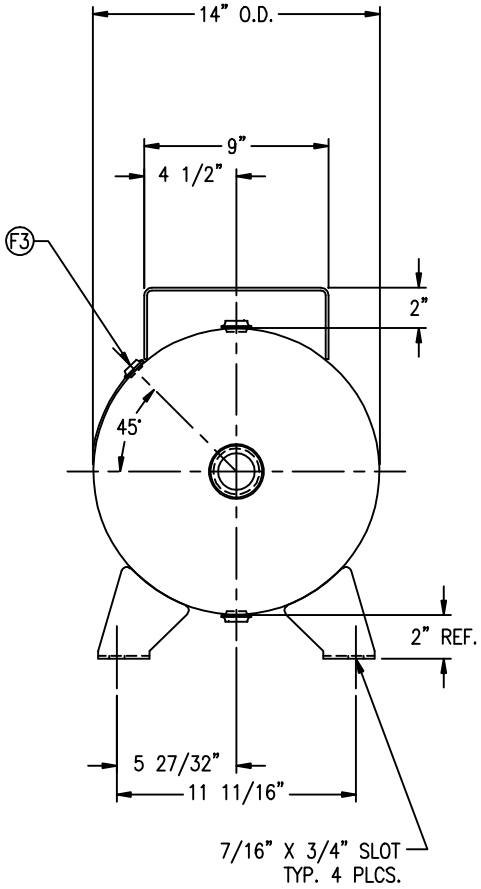

FIND NO.	NPT SIZE
F1	1 1/2
F2	1/2
F3	1/4

SYM	DATE	BY	REVISION	APP	XREF REV.	NOTES

SPECIFICATIONS

O.D.14 LGTH. 33
MAWP 300 PSI @ 650 °F
RT-NO MDMT -20 °F@ 300 PSI

GAL. 20 S.A. 10.7
WT. 95# CU.FT. 2.7

CRN H8370.1234567890

WELD DETAILS: M-1932
STD. TOLERANCES (UNLESS OTHERWISE NOTED): M-2461

MANCHESTER TANK

HORIZONTAL AIR RECEIVER

DRAWN BY	DATE	SCALE: NONE
APP. BY	DATE	DRAWING NO. 302468